User Manual

GETTING STARTED? EASY.



ZOG15311XK

EN User Manual
Oven

EG

ZANUSSI

⚠ SAFETY INFORMATION

Before the installation and use of the appliance, carefully read the supplied instructions. The manufacturer is not responsible for any injuries or damage that are the result of incorrect installation or usage. Always keep the instructions in a safe and accessible location for future reference.

CHILDREN AND VULNERABLE PEOPLE SAFETY

- This appliance can be used by children aged from 8 years and above and persons with reduced physical, sensory or mental capabilities or lack of experience and knowledge if they have been given supervision or instruction concerning the use of the appliance in a safe way and understand the hazards involved.
- Children between 3 and 8 years of age and persons with very extensive and complex disabilities shall be kept away from the appliance unless continuously supervised.
- Children of less than 3 years of age should be kept away from the appliance unless continuously supervised.
- Do not let children play with the appliance.
- Keep all packaging away from children and dispose of it appropriately.
- Keep children and pets away from the appliance when it operates or when it cools down. Accessible parts may become hot during use.
- If the appliance has a child safety device, it should be activated.
- Children shall not carry out cleaning and user maintenance of the appliance without supervision.

GENERAL SAFETY

- Only a qualified person must install this appliance and replace the cable.
- WARNING: The appliance and its accessible parts become hot during use. Care should be taken to avoid touching heating elements.
- Always use oven gloves to remove or put in accessories or ovenware.

- Before carrying out any maintenance, disconnect the appliance from the power supply.
- WARNING: Ensure that the appliance is switched off before replacing the lamp to avoid the possibility of electric shock.
- Do not use the appliance before installing it in the built-in structure.
- Do not use a steam cleaner to clean the appliance.
- Do not use harsh abrasive cleaners or sharp metal scrapers to clean the glass door since they can scratch the surface, which may result in shattering of the glass.
- If the mains power supply cable is damaged, it must be replaced by the manufacturer, its Authorised Service Centre or similarly qualified persons to avoid an electrical hazard.
- To remove the shelf supports first pull the front of the shelf support and then the rear end away from the side walls. Install the shelf supports in the opposite sequence.

SAFETY INSTRUCTIONS

This appliance is suitable for the following markets:
EG

INSTALLATION



WARNING! Only a qualified person must install this appliance.

- Remove all the packaging.
- Do not install or use a damaged appliance.
- Follow the installation instructions supplied with the appliance.
- Always take care when moving the appliance as it is heavy. Always use safety gloves and enclosed footwear.
- Do not pull the appliance by the handle.
- Install the appliance in a safe and suitable place that meets installation requirements.
- Keep the minimum distance from other appliances and units.
- Before mounting the appliance, check if the oven door opens without restraint.
- Do not operate the appliance without the cavity bottom cover. It is a functional safety component.
- The appliance is equipped with an electric cooling system. It must be operated with the electric power supply.

Cabinet minimum height (Cabinet under the worktop minimum height)	590 (600) mm
Cabinet width	560 mm
Cabinet depth	550 (550) mm
Height of the front of the appliance	594 mm
Height of the back of the appliance	576 mm
Width of the front of the appliance	595 mm
Width of the back of the appliance	559 mm
Depth of the appliance	569 mm
Built in depth of the appliance	548 mm
Depth with open door	1022 mm

Ventilation opening minimum size. Opening placed on the bottom rear side	560x110 mm
Ventilation opening minimum size. Opening placed on the upper rear side	560x50 mm
Mains supply cable length. Cable is placed in the right corner of the back side	1500 mm
Mounting screws	4x25 mm

ELECTRICAL CONNECTION

WARNING! Risk of fire and electric shock.

- All electrical connections should be made by a qualified electrician.
- The appliance must be earthed.
- Make sure that the parameters on the rating plate are compatible with the electrical ratings of the mains power supply.
- Always use a correctly installed shockproof socket.
- Do not use multi-plug adapters and extension cables.
- Make sure not to cause damage to the mains plug and to the mains cable. Should the mains cable need to be replaced, this must be carried out by our Authorised Service Centre.
- Do not let mains cables touch or come near the appliance door or the niche below the appliance, especially when it operates or the door is hot.
- The shock protection of live and insulated parts must be fastened in such a way that it cannot be removed without tools.
- Connect the mains plug to the mains socket only at the end of the installation. Make sure that there is access to the mains plug after the installation.
- If the mains socket is loose, do not connect the mains plug.
- Do not pull the mains cable to disconnect the appliance. Always pull the mains plug.
- Use only correct isolation devices: line protecting cut-outs, fuses (screw type fuses removed from the holder), earth leakage trips and contactors.
- The electrical installation must have an isolation device which lets you disconnect the appliance from the mains at all poles. The isolation device must have a contact opening width of minimum 3 mm.
- This appliance is supplied only with a main cable.

Cable types applicable for installation or replacement for Europe:

H05 V2V2-F (T90), H05 BB-F

For the section of the cable refer to the total power on the rating plate. You can also refer to the table:

Total power (W)	Section of the cable (mm^2)
maximum 1380	3 x 0.75
maximum 2300	3 x 1
maximum 3680	3 x 1.5

The earth cord (green / yellow cable) must be 2 cm longer than phase and neutral cables (blue and brown cables).

GAS CONNECTION

- All gas connections must be made by a qualified person.
- Before installation, make sure that the local distribution conditions (nature of the gas and gas pressure) and the adjustment of the appliance are compatible.
- Make sure that there is air circulation around the appliance.
- The information about the gas supply is on the rating plate.
- This appliance is not connected to a device, which evacuates the products of combustion. Make sure to connect the appliance according to current installation regulations. Follow the requirements for adequate ventilation.

USE

WARNING! Risk of injury, burns and electric shock or explosion.

- This appliance is for household use only.
- Do not change the specification of this appliance.
- Make sure that the ventilation openings are not blocked.
- Do not let the appliance stay unattended during operation.

- Deactivate the appliance after each use.
- Be careful when you open the appliance door while the appliance is in operation. Hot air can release.
- Do not operate the appliance with wet hands or when it has contact with water.
- Do not apply pressure on the open door.
- Do not use the appliance as a work surface or as a storage surface.
- Open the appliance door carefully. The use of ingredients with alcohol can cause a mixture of alcohol and air.
- Do not let sparks or open flames to come in contact with the appliance when you open the door.
- Do not put flammable products or items that are wet with flammable products in, near or on the appliance.



WARNING! Risk of damage to the appliance.

- To prevent damage or discoloration to the enamel:
  - do not put aluminium foil directly on the bottom of cavity of the appliance.
  - do not put water directly into the hot appliance.
  - do not keep moist dishes and food in the appliance after you finish the cooking.
  - be careful when you remove or install the accessories.
- Discoloration of the enamel or stainless steel has no effect on the performance of the appliance.
- Use a deep pan for moist cakes. Fruit juices cause stains that can be permanent.
- This appliance is for cooking purposes only. It must not be used for other purposes, for example room heating.
- Always cook with the oven door closed.
- If the appliance is installed behind a furniture panel (e.g. a door) make sure the door is never closed when the appliance is in operation. Heat and moisture can build up behind a closed furniture panel and cause subsequent damage to the appliance, the housing unit or the floor. Do not close the furniture panel until the appliance has cooled down completely after use.

CARE AND CLEANING



WARNING! Risk of injury, fire, or damage to the appliance.

- Before maintenance, deactivate the appliance and disconnect the mains plug from the mains socket.
- Make sure the appliance is cold. There is the risk that the glass panels can break.
- Replace immediately the door glass panels when they are damaged. Contact the Authorised Service Centre.
- Clean regularly the appliance to prevent the deterioration of the surface material.
- Clean the appliance with a moist soft cloth. Only use neutral detergents. Do not use any abrasive products, abrasive cleaning pads, solvents or metal objects.
- If you use an oven spray, follow the safety instruction on it's packaging.
- Do not clean the catalytic enamel (if applicable) with any kind of detergent.

INTERNAL LIGHTING



WARNING! Risk of electric shock.

- The type of light bulb or halogen lamp used for this appliance is for household appliances only. Do not use it for house lighting.
- Before replacing the lamp, disconnect the appliance from the power supply.
- Only use lamps with the same specifications.

SERVICE

- To repair the appliance contact the Authorised Service Centre.
- Use original spare parts only.

DISPOSAL



WARNING! Risk of injury or suffocation.

- Contact your municipal authority for information on how to discard the appliance correctly.
- Disconnect the appliance from the mains supply.
- Cut off the mains electrical cable close to the appliance and dispose of it.
- Flat the external gas pipes.

INSTALLATION

WARNING! Refer to Safety chapters.

GAS CONNECTION

The gas supply ramp is on the back of the oven.

Do not use rubber flexible pipes.

1. Before the gas connection, disconnect the oven from the mains.
2. Close the primary valve of the gas supply.
3. Do not fully put the oven into the built-in cabinet, leave approximately 30 cm gap.
4. Connect gas supply.

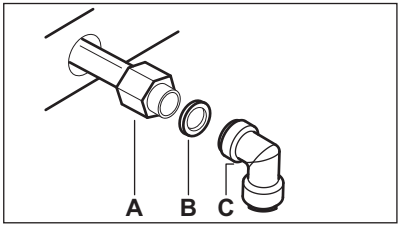

   A. Gas supply ramp, end of shaft with ramp
   B. Washer
   C. Elbow
5. Put the supplied gasket between the pipe and the gas supply ramp. Turn the pipe to the 1/2" gas supply ramp.
6. Use a 22 mm spanner to tighten the nuts. Keep the gas supply ramp in the correct position. Gently handle the gas supply circuit.

WARNING! Do not use flame to check for leaks.

7. Fully move the oven into the built-in cabinet.

WARNING! Do not squeeze the gas supply ramp and the pipe when you move the oven into the built-in cabinet.

8. Seal the connection correctly. Use a leak detection to control it.

ADJUSTMENT TO DIFFERENT TYPES OF GAS

Only a qualified technician is authorized to handle adjustment of different types of gas.

The oven is set for different types of gas, you can switch between liquid gas and natural gas with the correct injectors.

The gas rate is adjusted to suit.

WARNING! Before you replace the injectors, make sure that the gas knobs are in the off position. Wait until the oven is cold. There is a risk of injury.

OVEN INJECTOR REPLACEMENT

1. Remove the bottom plate of the oven cavity (A) to get access to the oven burner (B).

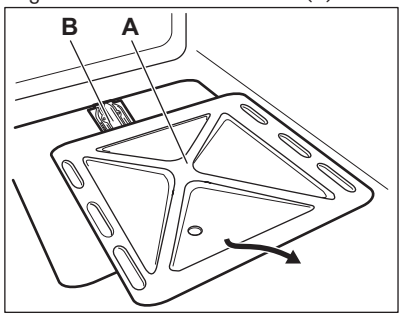

2. Release the screw (C), which keeps the burner in position.

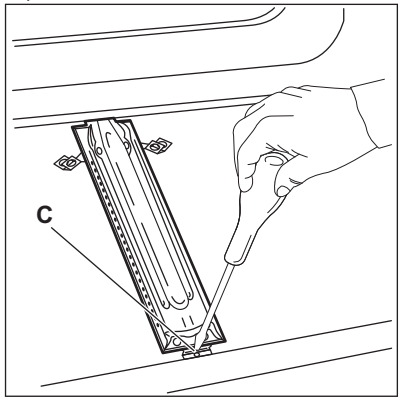

3. Carefully move the burner off the injector support (D).

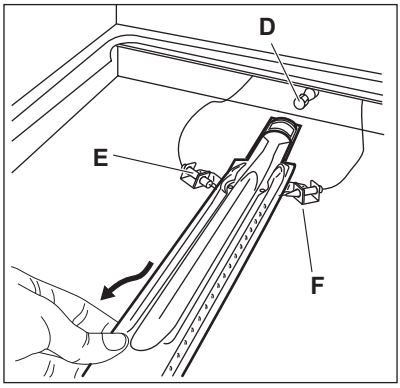

4. Slowly move it to the left side. Do not apply force to the wire of the spark plug connector (F) and to the thermocouple conductor (E).
5. Release the burner injector (D) with a 7 mm socket spanner and replace it with a different one, which is necessary for the type of gas you use.
   Refer to “Technical data” chapter.
6. Assemble the burner in a reverse sequence.

Replace the gas type sticker near the gas supply ramp with the one related to the new gas type.

The gas oven burner does not need any primary gas regulation.

Make sure that the gas supply pressure of the appliance is in line with the recommended values.

If the supply gas pressure is changeable or different than the necessary pressure, you must fit an applicable pressure adjuster on the gas supply pipe.

BUILDING IN

Only set up the appliance in a kitchen or in a kitchen-dining room. Do not set up the appliance in a bathroom or a bedroom.

You can install the appliance "built-in" or "built-under". The dimensions of the built-in cabinet must agree with the related illustrations.

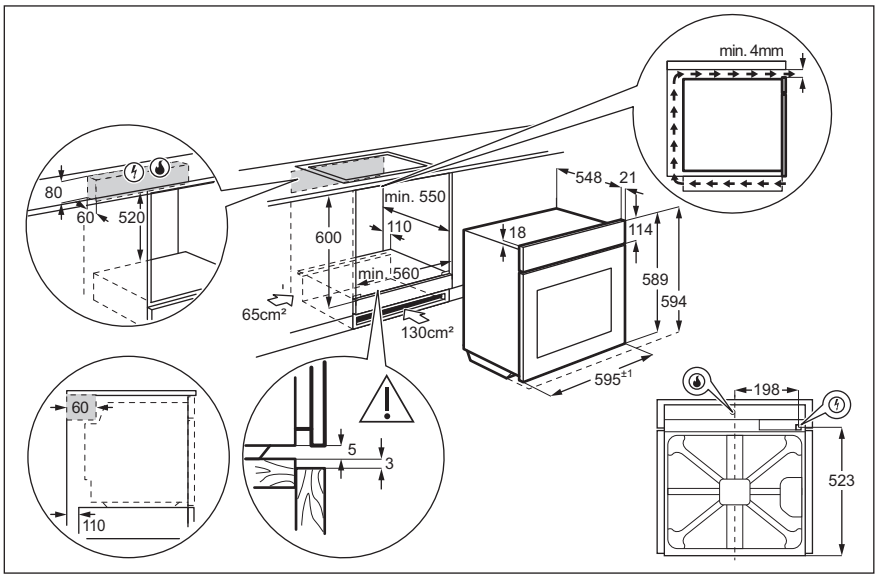

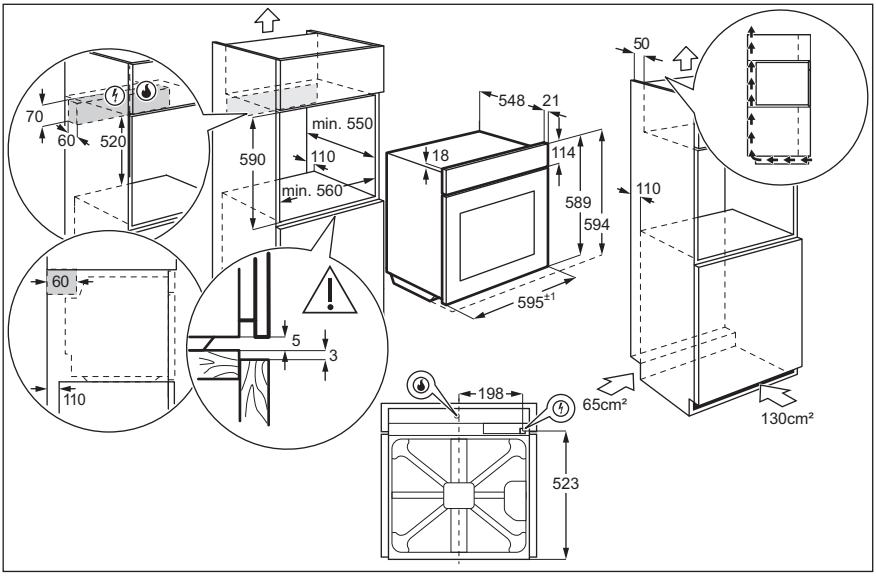

There must be a clearance of minimum 4 mm between the top surface of the appliance and the inner top of the cabinet.

When you install the appliance "built-under" (below a hob), install the hob before the oven unit.

The materials must be resistant to a temperature increase of minimum 60 °C above the ambient temperature.

There must be a continuous air supply around the oven in order to not have the oven become too hot.

For correct operation, the oven cabinet must have a minimum opening of 130 cm² in the front or on the sides (a minimum of 65 cm² for each side). The manufacturer recommends a 130 cm² opening in the front for a brick cabinet and a 65 cm² opening for each side for a wooden cabinet.

When you install a hob above the oven, make different electrical connections for the hob and for the oven.

Only make connections with correct cables for the power supplied.

Make sure that after the installation there is easy access to the appliance if repairs or maintenance are necessary.

SECURING THE OVEN TO THE CABINET

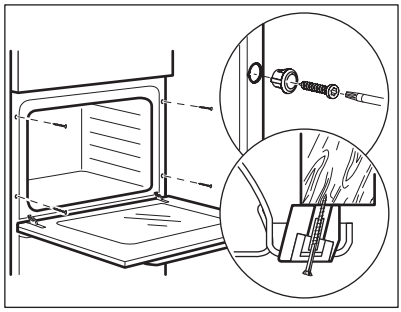

PRODUCT DESCRIPTION

GENERAL OVERVIEW

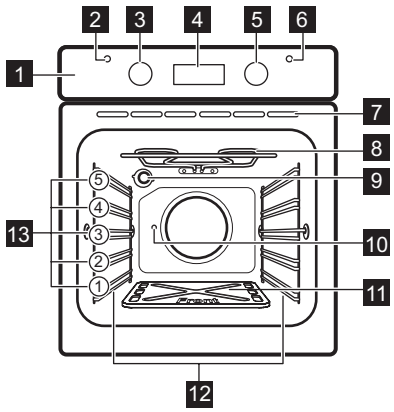

1. Control panel
2. Gas block indicator
3. Knob for the heating functions
4. Display
5. Control knob (for the temperature)
6. Temperature indicator / symbol
7. Air vents for the cooling fan
8. Heating element
9. Lamp
10. Turnspit hole
11. Oven cavity bottom plate
12. Shelf support, removable
13. Shelf positions

ACCESSORIES

- **Wire shelf**
  For cookware, cake tins, roasts.
- **Baking tray**
  For cakes and biscuits.
- **Aluminium baking tray**
  For cakes and biscuits.
- **Turnspit**
  For roasting larger joints of meat and poultry.

CONTROL PANEL

BUTTONS

Sensor field / Button	Function	Description
—	MINUS	To set the time.
⏲	CLOCK	To set a clock function.
+	PLUS	To set the time.

DISPLAY

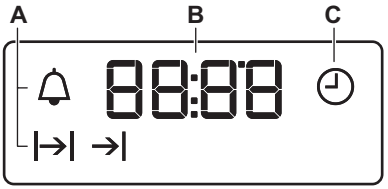

A. Clock functions
B. Timer
C. Clock function

BEFORE FIRST USE

WARNING! Refer to Safety chapters.

To set the Time of day refer to "Clock functions" chapter.

OVEN CAVITY BOTTOM PLATE

When you buy the oven, at first the oven cavity bottom plate is together with the accessories. Before you use the oven for the first time, put the bottom plate with the hole on its front part in the burner area, as shown in "Product description" chapter.

INITIAL CLEANING

Remove all accessories and removable shelf supports from the oven.

Refer to "Care and cleaning" chapter.

Clean the oven and the accessories before first use.

Put the accessories and the removable shelf supports back to their initial position.

PREHEATING

Preheat the empty oven before first use.

1. Set the function .Set the maximum temperature.
2. Let the oven operate for 1 hour.
3. Set the function . Set the maximum temperature.
4. Let the oven operate for 15 minutes.
5. Turn off the oven and let it cool down.

Accessories can become hotter than usual. The oven can emit an odour and smoke. Make sure that the airflow in the room is sufficient.

DAILY USE

WARNING! Refer to Safety chapters.

OVEN FUNCTIONS

Oven function	Application
0 Off position	The oven is off.
 Light	To turn on the lamp without a cooking function.
 Grilling	To grill flat food in small quantities in the middle of the shelf. To make toasts.
 Grilling + Turnspit	To roast larger pieces of meet, kebabs on the turnspit.

Oven function	Application
 Conventional Cooking	Heat from the bottom of the oven. Range of temperature adjustment according to the temperature knob indication.

GAS BLOCK WARNING INDICATOR

This light comes on to indicate gas block and a burner shutdown. To eliminate the block, turn the knob for the oven functions and the knob for the temperature to the Off position "0", wait for one minute and then repeat the lighting operation.

TEMPERATURE INDICATOR

The temperature indicator comes on when the oven heats up. It goes off when the oven is at its correct temperature. It then cycles on and off to show that the temperature adjusts.

IGNITION OF OVEN GAS BURNER

When you use the oven for the first time, several lighting attempts are normally required due to the presence of air in the gas pipe.

WARNING! The oven cannot be lit with a naked flame.

1. Turn the knob for the oven functions to .

The oven light comes on.

2. Turn the knob for the temperature to select the temperature.

The temperature lamp / indicator comes on.
The oven starts the lightning phase after about 5 seconds.

The ignition cycle is 12 - 16 seconds of sparking. It is performed maximum four times.

In case of ignition failure, after 40 - 45 seconds of stand-by, the Gas block warning indicator comes on and the flow of gas is stopped. To try lighting again, turn the knob for the oven functions and the knob for the temperature to the Off position, wait for one minute then repeat the operations described above.

In case of a power failure during the gas oven operation, the oven deactivates and the gas flow is stopped. When the power is restored, reset the clock functions before you use the appliance again.

The flame is visible through the front holes of the bottom of the oven. When the temperature indicator is off, also the burner is off.

When you switch off the oven during the operation and you turn in on immediately, it is normal to have a maximum 60 seconds of stand-by before the ignition starts.

USING THE GRILL

1. To activate only the electric grill, turn the knob for the oven functions to  and set the maximum temperature.

2. To activate the electric grill with turnspit, turn the knob for the oven functions to  and set the maximum temperature.

3. Adjust the grill and the deep pan runner position to fit in different portions of food.

Refer to "Hints and Tips" chapter, Grilling.

CLOCK FUNCTIONS

CLOCK FUNCTIONS TABLE

Clock function		Application
	TIME OF DAY	To set, change or check the time of day.
|→|	DURATION	To set how long the appliance operates.
→|	END	To set when the appliance deactivates.
|→| →|	TIME DELAY	To combine DURATION and END function.
	MINUTE MINDER	To set countdown time. This function has no effect on the operation of the appliance. You can set the MINUTE MINDER at any time, also when the appliance is off.

SETTING THE TIME. CHANGING THE TIME

You must set the time before you operate the oven.

The flashes when you connect the appliance to the electrical supply, when there was a power cut or when the timer is not set.

Press the + or − to set the correct time.
After approximately five seconds, the flashing stops and the display shows the time of day you set.

To change the time of day press again and again until starts to flash.

SETTING THE DURATION

1. Set an oven function and temperature.
2. Press again and again until \|→\| starts to flash.
3. Press + or − to set the DURATION time.

The display shows \|→\|.

4. When the time ends, \|→\| flashes and an acoustic signal sounds. The appliance deactivates automatically.
5. Press any button to stop the acoustic signal.
6. Turn the knob for the oven functions and the knob for the temperature to the off position.

SETTING THE END

1. Set an oven function and temperature.
2. Press again and again until →\| starts to flash.
3. Press + or − to set the time.

The display shows →\|.

4. When the time ends, →\| flashes and an acoustic signal sounds. The appliance deactivates automatically.
5. Press any button to stop the signal.
6. Turn the knob for the oven functions and the knob for the temperature to the off position.

SETTING THE TIME DELAY

1. Set an oven function and temperature.
2. Press again and again until \|→\| starts to flash.
3. Press + or − to set the time for DURATION.
4. Press .
5. Press + or − to set the time for END.
6. Press to confirm.

Appliance turns on automatically later on, works for the set DURATION time and stops at the set END time. At the set time an acoustic signal sounds.

7. The appliance deactivates automatically. Press any button to stop the signal.
8. Turn the knob for the oven functions and the knob for the temperature to the off position.

SETTING THE MINUTE MINDER

1. Press again and again until starts to flash.
2. Press + or − to set the necessary time.

The Minute Minder starts automatically after 5 seconds.

3. When the set time ends, an acoustic signal sounds. Press any button to stop the acoustic signal.
4. Turn the knob for the oven functions to the off position.

CANCELLING THE CLOCK FUNCTIONS

1. Press the ⏲ again and again until the necessary function indicator starts to flash.
2. Press and hold —.

The clock function goes out after some seconds.

USING THE ACCESSORIES

WARNING! Refer to Safety chapters.

USING THE TURNSPIT

WARNING! Be careful when you use the turnspit. The forks and the spit are sharp. There is a risk of injury.

WARNING! Use oven gloves when you remove the turnspit. The turnspit and the grill are hot. There is a risk of burns.

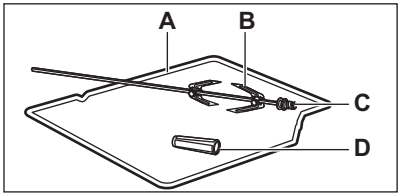

A. Turnspit frame
B. Forks
C. Spit
D. Handle

1. Put the turnspit handle into the spit.
2. Put the deep pan on the lowest shelf position.
3. Put the spit frame on the third shelf position from the bottom.

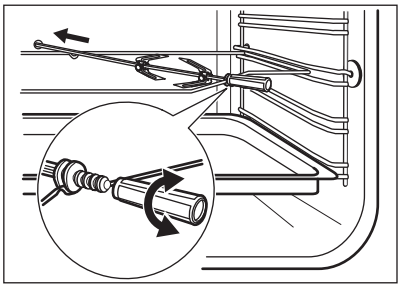

4. Install the first fork on the spit, then put the meat on the turnspit and install the second fork.

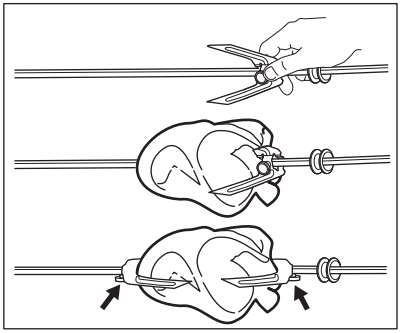

5. Use the screws to tighten the forks.
6. Put the tip of the spit into the turnspit hole.
7. Lay the back side of the spit on the turnspit frame.
   Refer to "Product description" chapter.
8. Remove the turnspit handle.
9. Select a function with the turnspit position. The turnspit rotates.
10. Set the necessary temperature. Refer to the cooking tables.

If a clock function (Duration or End) ends and you do not turn off the oven, the turnspit continues to operate for the next 10 minutes.

INSERTING THE ACCESSORIES

Wire shelf:

Push the shelf between the guide bars of the shelf support and make sure that the feet point down.

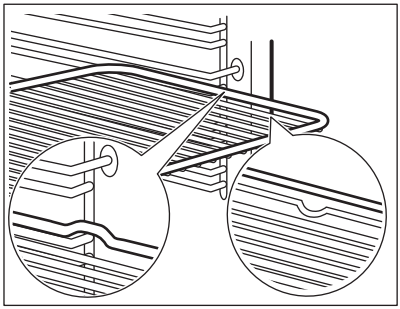

Baking tray:

Push the baking tray between the guide bars of the shelf support.

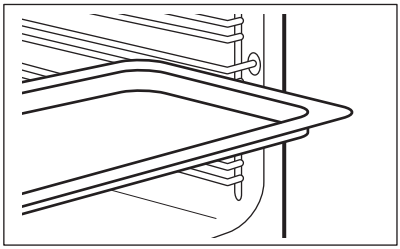

Wire shelf and baking tray together:

Push the baking tray between the guide bars of the shelf support and the wire shelf on the guide bars above.

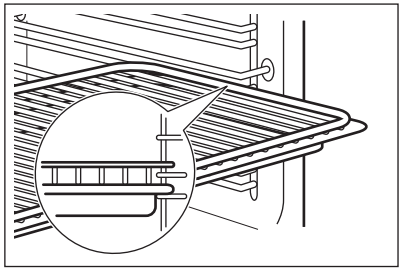

Small indentation at the top increase safety. The indentations are also anti-tip devices. The high rim around the shelf prevents cookware from slipping of the shelf.

ADDITIONAL FUNCTIONS

COOLING FAN

When the oven operates, the cooling fan turns on automatically to keep the surfaces of the oven cool. If you turn off the oven, the cooling fan can continues to operate until the oven cools down.

SAFETY THERMOSTAT

Incorrect operation of the appliance or defective components can cause dangerous overheating. To prevent this, the oven has a safety thermostat which interrupts the power supply, except for the timer and the cooling fan. To activate the oven again please contact your dealer or the service centre.

HINTS AND TIPS

WARNING! Refer to Safety chapters.

The temperature and baking times in the tables are guidelines only. They depend on the recipes and the quality and quantity of the ingredients used.

COOKING RECOMMENDATIONS

The oven has five shelf positions.

Count the shelf positions from the bottom of the oven floor.

Your oven may bake or roast differently to the oven you had before. The below tables provide you with the standard settings for temperature, cooking time and shelf position.

If you cannot find the settings for a special recipe, look for the similar one.

Baking cakes

Do not open the oven door before 3/4 of the set cooking time is up.

Cooking meat and fish

Leave the meat for approximately 15 minutes before carving so that the juice does not seep out.

To prevent too much smoke in the oven during roasting, add some water into the deep pan. To prevent the smoke condensation, add water each time after it dries up.

Cooking times

Cooking times depend on the type of food, its consistency, and volume.

Initially, monitor the performance when you cook. Find the best settings (heat setting, cooking time, etc.) for your cookware, recipes and quantities when you use this appliance.

COOKING TABLES

Casserolesl

Preheat the empty oven before cooking.
Prepare 1.5 - 2.5 kg of food.
Use the fourth shelf position.

Food	Temperature (°C)	Time (min)
Lasagne	180	45 - 50
Cannelloni	180	45 - 50
Potato gratin	180	33 - 40
Baked macaroni	180	45 - 50
Kebab Hala	190	35 - 40

Meat

Preheat the empty oven before cooking.
Use the third shelf position.

Food	Temperature (°C)	Time (min)
Mutton, 1.7 kg	180 - 200	80 - 100
Chicken, 1 - 1.8 kg	220 - 230	80 - 90
Duck, 1.8 - 2.5 kg	220 - 230	100 - 120
Goose, 2.5 - 3.5 kg	220 - 230	160 - 180
Rabbit, 2 kg	180 - 190	60 - 80
Goat meat, 1.8 kg	170 - 180	60 - 90

Pizza

Preheat the empty oven before cooking.
Prepare 1.4 - 1.5 kg of food.
Use the third or fourth shelf position.

Food	Temperature (°C)	Time (min)
Pizza, thin	200 - 210	20 - 30
Pizza, thick	200 - 210	25 - 30
Calzone	190 - 200	25 - 30

Cakes

Preheat the empty oven before cooking.

Food	Shelf position	Temperature (°C)	Time (min)
Flat cake, 0.6 - 1.0 kg	4	170 - 180	20 - 30
Sponge cake, 1.0 - 1.5 kg	4	170 - 180	40 - 50
Feteer meshaltet, 1.2 - 1.5 kg	3 or 4	190	40 - 45

Grilling

Preheat the empty oven for 5 minutes.
Use the fourth shelf position.
Maximum temperature is the default value for all types of food.

Food	Quantity (kg)	Time (min)
Burgers	0.6 (6 pieces)	20 - 30
Toast browning	0.5	9 - 12
Toast Hawai	6 pieces	7 - 14

GRILLING

Preheat the empty oven for 3 minutes before cooking.
Use the fourth shelf position.
Maximum temperature is the default value for all types of food.

Food	Pieces	Time (min)	
		1st side	2nd side
Fillet steaks, 0.8 kg	4	12 - 15	12 - 14
Beef steaks, 0.6 kg	4	10 - 12	6 - 8
Chicken (cut in 2), 1.0 kg	2	30 - 35	25 - 30
Kebabs	4	10 - 15	10 - 12
Chicken breast, 0.4 kg	4	12 - 15	12 - 14
Fish fillet, 0.4 kg	4	12 - 14	10 - 12
Toasted sandwiches	4 - 6	5 - 7	-

Food	Pieces	Time (min)	
		1st side	2nd side
Toast	4 - 6	2 - 4	2 - 3

TURNSPIT

Preheat the empty oven for 3 minutes before cooking.
Use the third shelf position.

Food	Temperature (°C)	Time (min)
Poultry, 1.0 - 1.2 kg	max.	75 - 85
Roasts, 0.8 - 1.0 kg	max.	75 - 85

INFORMATION FOR TEST INSTITUTES

Tests according to IEC 60350-1.

Food	Function	Accessories	Shelf position	Temperature (°C)	Time (min)	Comments
Small cake	Conventional Cooking	Aluminized baking tray	4	150 - 170	35 - 55	Put 20 small cakes per one baking tray. Preheat the oven for 10 minutes.
Apple pie	Conventional Cooking	Wire shelf	4	170	80 - 90	Use 2 tins (20 cm diameter), diagonally shifted. Preheat the oven for 10 minutes.
Sponge cake	Conventional Cooking	Wire shelf	4	170	50 - 60	Use a cake mould (26 cm diameter). Preheat the oven for 10 minutes.
Short bread	Conventional Cooking	Aluminized baking tray	4	160 - 170	25 - 40	Preheat the oven for 10 minutes.

Food	Function	Accesso-ries	Shelf position	Temper-ature (°C)	Time (min)	Comments
Toast 4 - 6 pieces	Grilling	Wire shelf	4	max.	2 - 3 minutes first side; 2 - 3 minutes sec-ond side	Preheat the oven for 3 minutes.
Beef burger 6 pieces, 0.6 kg	Grilling	Wire shelf and drip-ping pan	4	max.	20 - 30	Put the wire shelf on the fourth level and the dripping pan on the third level of the oven. Turn the food half-way through the cooking time. Preheat the oven for 3 minutes.

CARE AND CLEANING

WARNING! Refer to Safety chapters.

NOTES ON CLEANING

Clean the front of the oven with a soft cloth with warm water and a mild cleaning agent.

To clean metal surfaces, use a dedicated cleaning agent.

Clean the oven interior after each use. Fat accumulation or other food remains may result in a fire.

Clean all accessories after each use and let them dry. Use a soft cloth with warm water and a cleaning agent. Do not clean the accessories in the dishwasher.

Clean stubborn dirt with a special oven cleaner.

If you have nonstick accessories, do not clean them using aggressive agents, sharp-edged objects or a dishwasher. It can cause damage to the nonstick coating.

Moisture can condense in the oven or on the door glass panels. To decrease the condensation, operate the oven for 10 minutes before cooking. Clean the moisture from the cavity after each use.

STAINLESS STEEL OR ALUMINIUM OVENS

Clean the oven door with a damp cloth or sponge only. Dry it with a soft cloth.

Do not use steel wool, acids or abrasive materials as they can damage the oven surface. Clean the oven control panel with the same precautions.

CLEANING THE DOOR GASKET

Regularly do a check of the door gasket. The door gasket is around the frame of the oven cavity. Do not use the oven if the door gasket is damaged. Contact an Authorised Service Centre.

To clean the door gasket, refer to the general information about cleaning.

REMOVING THE SHELF SUPPORTS

To clean the oven, remove the shelf supports.

CAUTION! Be careful when you remove the shelf supports.

1. Pull the front of the shelf support away from the side wall.

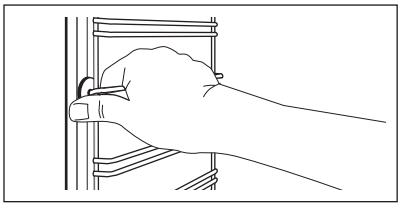

2. Pull the rear end of the shelf support away from the side wall and remove it.

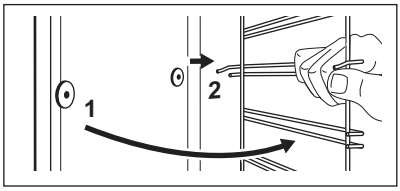

Install the removed accessories in the opposite sequence.

REMOVING AND INSTALLING DOOR

The oven door has two glass panels. You can remove the oven door and the internal glass panel to clean it. Read the whole "Removing and installing door" instruction before you remove the glass panels.

The oven door may close if you try to remove the internal glass panel before you remove the oven door.

CAUTION! Do not use the oven without the internal glass panel.

1. Open the door fully and hold both hinges.

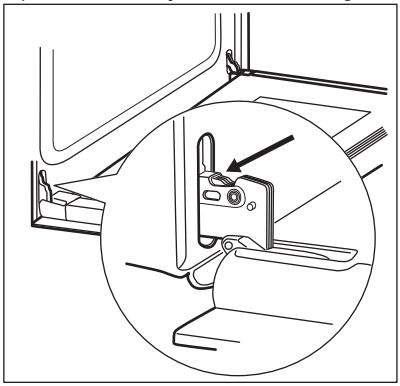

2. Lift and turn the levers fully on both hinges.

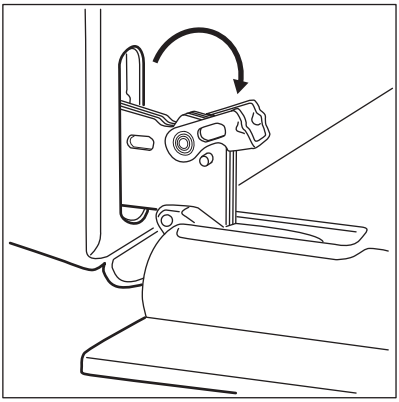

3. Close the oven door halfway to the first opening position. Then lift and pull forward and remove the door from its seat.

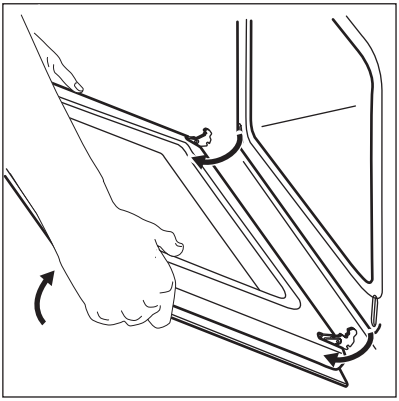

4. Put the door on a soft cloth on a stable surface.
5. Hold the door trim (B) on the top edge of the door at the two sides and push inwards to release the clip seal.

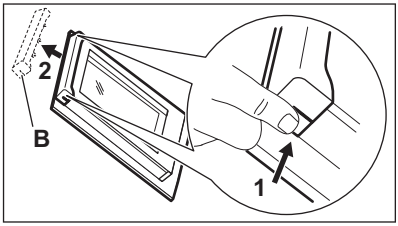

6. Pull the door trim to the front to remove it.
7. Hold the door glass panel by its top edge and carefully pull it out. Make sure the glass slides out of the supports completely.

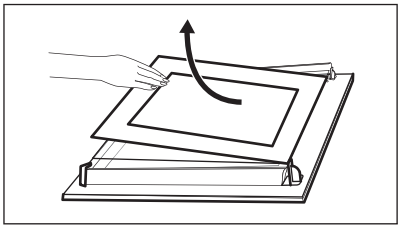

8. Clean the glass panels with water and soap. Dry the glass panels carefully. Do not clean the glass panels in the dishwasher.

When the cleaning is completed, install the glass panel and the oven door.

The screen-printing zone must face the inner side of the door. Make sure that after the installation the surface of the glass panel frame on the screen-printing zones is not rough when you touch it.

When installed correctly the door trim clicks.

Make sure that you install the internal glass panel in the seats correctly.

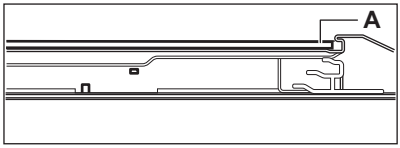

REPLACING THE LAMP

WARNING! Risk of electric shock. The lamp can be hot.

1. Turn off the oven.

Wait until the oven is cooled down.

2. Disconnect the oven from the mains.
3. Put a cloth on the bottom of the cavity.

CAUTION! Always hold the halogen lamp with a cloth to prevent grease residue from burning on the lamp.

The back lamp

1. Turn the lamp glass cover to remove it.
2. Clean the glass cover.
3. Replace the lamp with a suitable 300 °C heat-resistant lamp.
4. Install the glass cover.

TROUBLESHOOTING

WARNING! Refer to Safety chapters.

WHAT TO DO IF...

Problem	Possible cause	Remedy
The oven does not heat up.	The oven is off.	Turn on the oven.
The oven does not heat up.	The clock is not set.	Set the clock. Refer to "Clock functions" chapter, Setting the time.
The oven does not heat up.	The necessary settings are not set.	Make sure that the settings are correct.
The oven does not heat up.	The fuse is blown.	Make sure that the fuse is the cause of the malfunction. If the fuse problem recurs, contact a qualified electrician.
The lamp does not work.	The lamp is broken.	Replace the lamp.

Problem	Possible cause	Remedy
The oven does not work.	Home central gas safety valve may be closed.	Make sure that home central gas safety valve is open. If the problem recurs, contact a qualified technician.
Steam and condensation settle on the food and in the oven cavity.	A dish was left in the oven for too long.	Food should not be left in the oven for longer than 15-20 minutes after cooking.
The display shows "12.00".	There was a power cut.	Reset the clock. Refer to "Clock functions" chapter, Setting the time.
The turnspit does not rotate.	The turnspit is not correctly installed into the turnspit hole.	Refer to "Using the accessories" chapter, Using the turnspit.

SERVICE DATA

If you cannot find a solution to the problem yourself, contact your dealer or an Authorised Service Centre.

The necessary data for the service centre is on the rating plate. The rating plate is on the front frame of the oven cavity. Do not remove the rating plate from the oven cavity.

We recommend that you write the data here:

Model (MOD.)	.....
Product number (PNC)	.....
Serial number (S.N.)	.....

TECHNICAL DATA

TECHNICAL DATA

TOTAL POWER:	Electric:	1.77 kW
	Gas original:	G20 (2H) 20 mbar = 2.6 kW
	Gas replacement:	G30 28-30 mbar = 196 g/h G31 37 mbar = 193 g/h
Electric supply:	220 - 240 V ~ 50 - 60 Hz	
Appliance category:	II2H3+	
Gas connection:	G 1/2"	
Appliance class:	3	

GAS OVEN BURNER

Gas type	NOMINAL GAS POWER (kW)	NOMINAL GAS FLOW (g/h)	Reduced gas power (kW)	BY-PASS NEEDLE (1/100 mm)	INJECTOR MARK (1/100 mm)
G20 (2H) 20 mbar	2.6	-	0.7	Regulated	112
G30 28-30 mbar	2.7	196	0.7	43	80
G31 37 mbar	2.7	193	0.7	43	80

ENVIRONMENTAL CONCERNS

Recycle materials with the symbol . Put the packaging in relevant containers to recycle it. Help protect the environment and human health by recycling waste of electrical and electronic appliances. Do not dispose of appliances marked with the symbol with the household waste. Return the product to your local recycling facility or contact your municipal office.

WWW.ZANUSSI.COM/SHOP

CE

867348120-D-362019